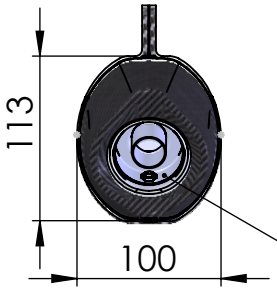

dB-Killer n°62
P/N 3014259802R

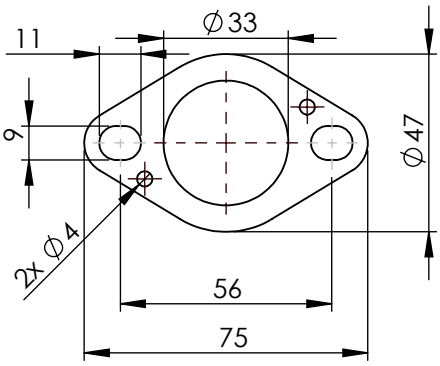

S.S. flange "45E"
P/N 205267R sp. 6mm

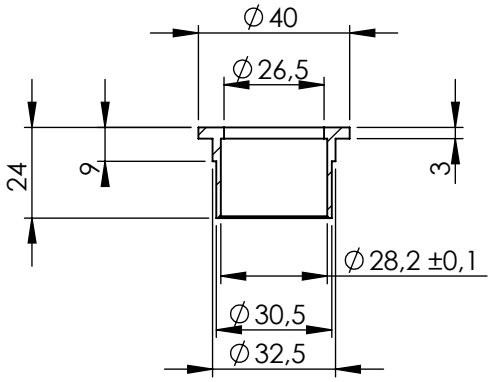

S.S. bushing
P/N 206662R

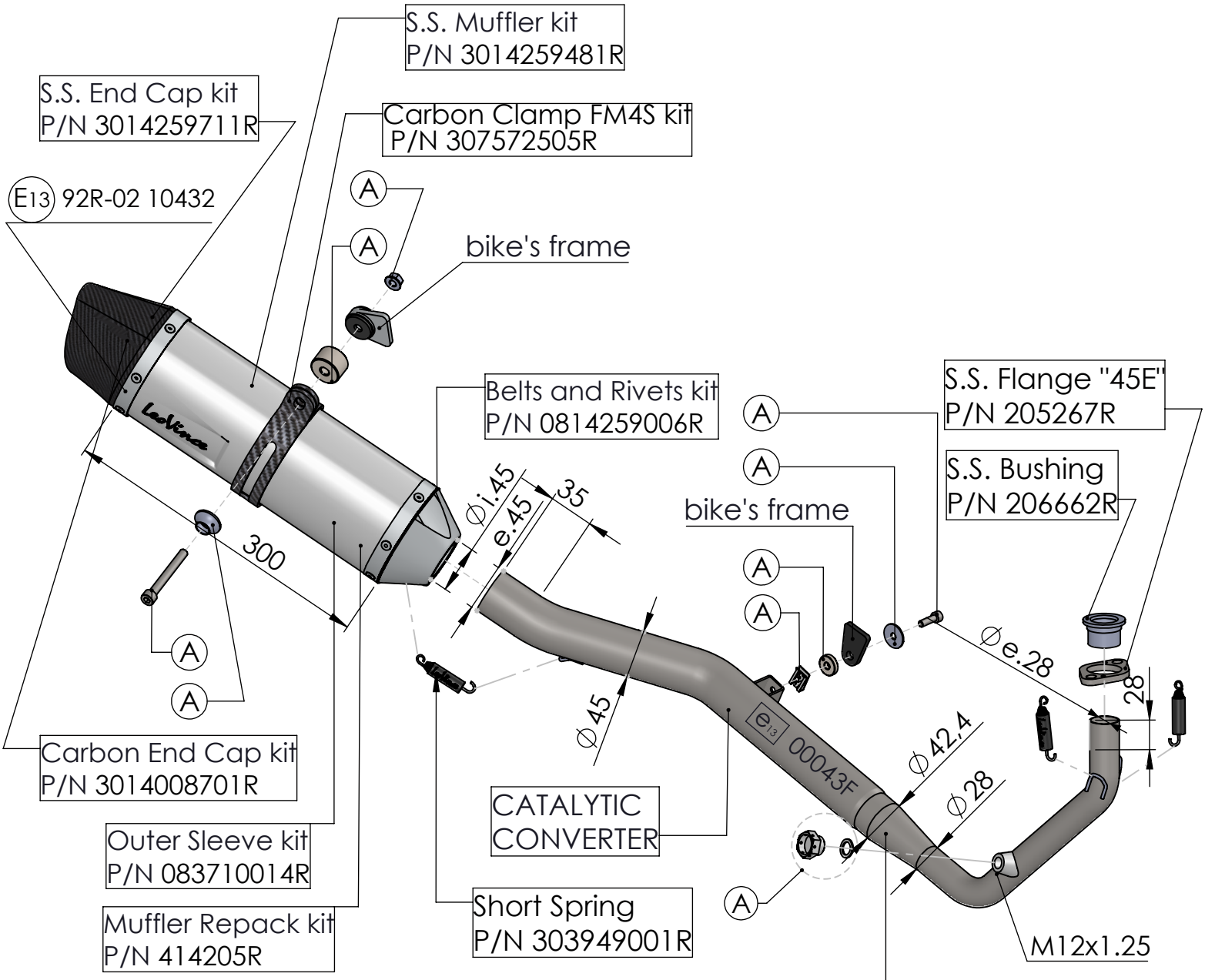

Ⓐ Fitting kit: P/N 3014456601R

ART. 14365EK - SPARE PARTS

YAMAHA MT-125 / XSR 125 / YZF-R 125

FULL SYSTEM LV ONE EVO STAINLESS STEEL APPROVED